VHF UHF Helical Filter Specification Sheet

Customer Name		Temwell's Part No.	TFW4651B-469.5M
Approval No. /dated	201801052CD	Temwell's Print name	4651B 469.5M
Work Instruction No.	201801052CD	Date	Jan.26.2018

(1)Pin Position

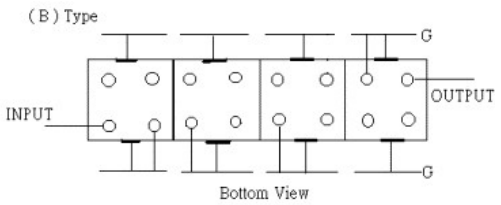

(2)Size Diagram

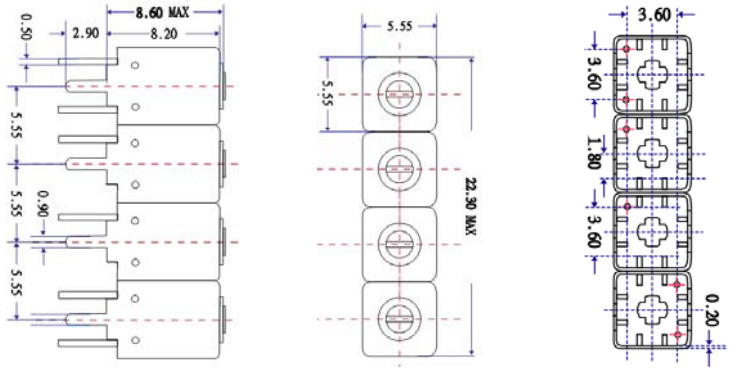

(3)Electric Charasteric

Item		Specify			Performance	
Center Freq.(Fo) +/- 0.5 %			469.5	MHz	469.5	MHz
Insertion Loss		Typ.	5.0	dB	4.25	dB
-3 dB Bandwidth		Typ.	10	MHz	17.1	MHz
Sensitivity (Attenuation)	Fo - 50 MHz	Typ.	71	dBc	81	dBc
	Fo + 50 MHz	Typ.	47	dBc	52	dBc
	Fo - ( )MHz	Typ.		dBc		dBc
	Fo +( )MHz	Typ.		dBc		dBc
Return Loss		Min.	12	dB	22.7	dB
Ripple		<	1	dB		dB
Impedance		In / Out : 50 Ω			In / Out : 50 Ω	
(4)Torque for Tuning Screw		> 60gf • cm				

(5)Temperature Condition:

Operating Temperature	0℃ ~ +60℃
Storage Temperature	-20℃ ~ +70℃
(6)Input Power	> 0.5Watt

(7)Measuring Circuit: ※Easy to match Impedance S11/S22 50Ω by parallel with about(- -).

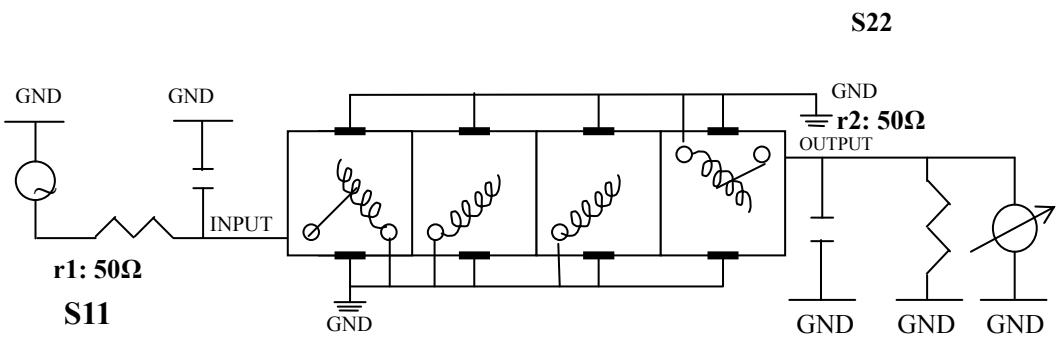

(Bottom View)

Approval	Supervisor	Designer	Aperture size
C.Y.Chang	C.K.Chang	W.W.Wang	5W4S(3.8*4.0)(4.03) 5HW024RB3(J1)

TEMWELL CORPORATION

Performance-TFW4651B-469.5M

201801052CD

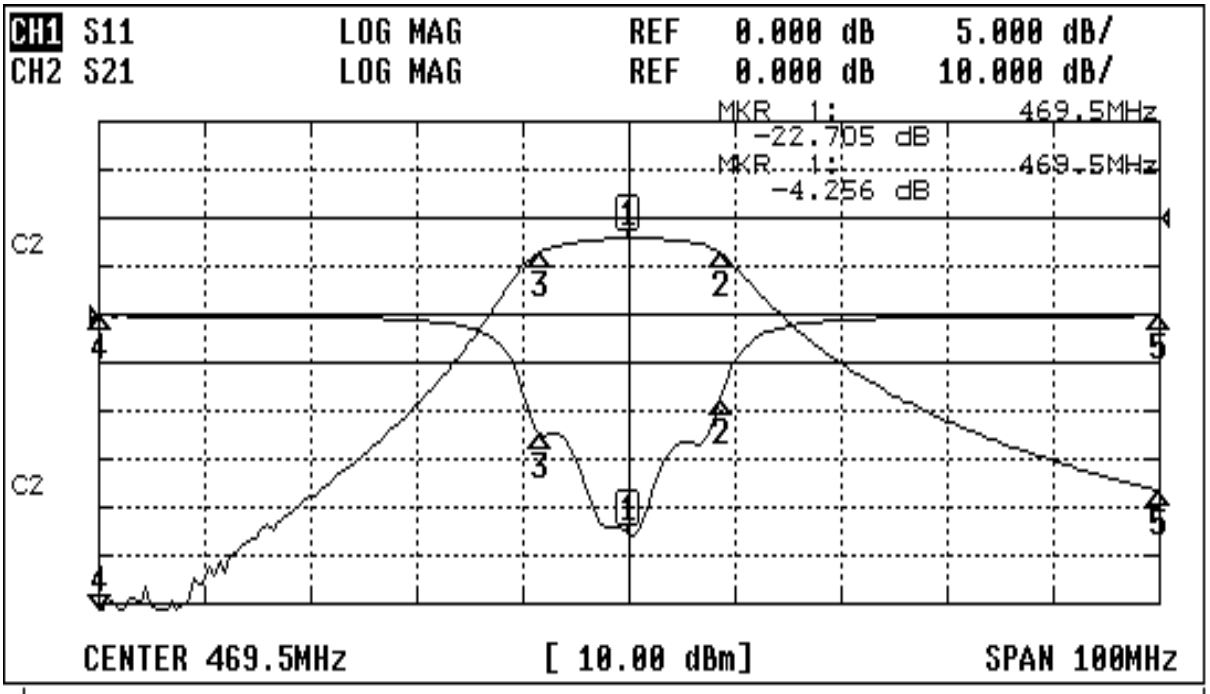

CH1 MARKER LIST

1:	469.500MHz	-22.705 dB
2:	478.166MHz	-8.732 dB
3:	461.000MHz	-12.327 dB
4:	419.500MHz	-0.136 dB
5:	519.500MHz	-0.137 dB
6:		
7:		
8:		
9:		
10:		

CH2 MARKER LIST

1:	469.500MHz	-4.254 dB
2:	478.166MHz	-7.300 dB
3:	461.000MHz	-7.230 dB
4:	419.500MHz	-86.020 dB
5:	519.500MHz	-56.733 dB
6:		
7:		
8:		
9:		
10:		